K L E TECHNOLOGICAL UNIVERSITY

(Formerly known as B V Bhoomaraddi College of Engineering & Technology)

HUBBALLI-580031, KARNATAKA

Course Project Report on

"Aurdino Cyclone Arcade Game"

A report submitted in partial fulfillment of the requirements for the IV semester in

Mechatronics (22EMEC204)

Experience Engineering @
School of Mechanical EngineeringKLETECH
Engage | Explore | Excel | Evolve

Submitted by

Roll No	USN	Name
137	01FE22BME069	Veeresh Palled
138	01FE22BME071	Prasad Mundolli
142	01FE22BME075	Puneet Dandin
157	01FE22BME112	Harshvardan Patil
160	01FE22BME118	Varun Teli

Under the Guidance of

Madhusudhana H K

2023-2024

Aurdino cyclone arcade game

1.0 INTRODUCTON

The Cyclone Arcade Game project is a captivating and interactive game developed using an Arduino microcontroller. The aim of this project is to recreate the excitement of arcade games typically found in amusement parks. The setup includes several key components: a colorful LED strip, a push button, an LCD display, a servo motor, and an IR sensor. The LED strip creates a moving light effect as its lights illuminate sequentially, adding to the visual appeal of the game. The push button allows players to interact with the game, aiming to stop the moving light at the designated winning position. The LCD display serves to communicate with the player, showing game instructions, status messages, and results. When a player successfully stops the light at the correct position, the LCD displays a congratulatory message, and the servo motor dispenses a chocolate reward as a tangible prize. Additionally, the IR sensor enhances the user experience by detecting the presence of a player, triggering a "Player Ready!" message on the LCD to indicate that the game is ready to start. This project seamlessly blends basic electronics with programming to deliver an engaging and rewarding arcade game experience, making it an excellent educational tool for learning Arduino and interactive electronics.

1.1 PROBLEM STATEMENT

There is a need for educational tools that combine learning with fun to effectively teach electronics and programming. Traditional methods lack hands-on experience, and standard arcade games don't offer educational value. The challenge is to create an interactive game using an Arduino microcontroller that is both engaging and educational. This game will feature an LED strip for visual effects, a push button for user interaction, an LCD display for communication, a servo motor for dispensing rewards, and an IR sensor for player detection. The goal is to provide a practical, enjoyable learning experience that introduces users to Arduino programming, circuit design, and sensor integration.

1.2 OBJECTIIVES OF THE PROJECT

- **Reliability**:
  - Ensure the game operates consistently without hardware or software failures.
  - Maintain stable and accurate sensor readings and button responses.

- **Speed**:
  - Achieve fast and responsive gameplay with minimal lag between player actions and system reactions.
  - Ensure the LED strip lights up in a smooth and timely manner to enhance the gaming experience.

- **Efficiency**:
  - Optimize the power consumption of the components to allow for prolonged operation.
  - Use efficient coding practices to maximize the performance of the Arduino.

●**Cost-effectiveness**: Our model doesn't exceed cost of 3000/-

2.0 MATERIALS AND METHODS

SL. NO	COMPONENTS	Specifications
1	Breadboard (1)	16.5 cm x 5.5 cm x 0.8 cm (L x W x H)
2	Arduino mega (1)	16 MHz clock speed and has 256 KB of flash memory
3	Servo motor (1)	23mm x 12.2mm x 29mm (L x W x H)
4	Push Butt(1)	Supply Current: Below 15mA
5	LCD Display	16 x 2 LCD Screen
6	Wires	-
7	Adapter	Requires 5v supply voltage
8	Led strip WS2812B	50 led,100cm length
9	IR sensors (1)	Typically, small and compact (20mm x 15mm x 10mm)

2.1 MECHANICAL COMPONENT

Cardboard:

- **Purpose**: Provides structural support and enclosure for the game.
- **Functionality**: Lightweight and customizable for shaping compartments and housing electronics like the Arduino and LCD display.
- **Application**: Forms the main body and barriers within the game setup.

Foam Sheet:

- **Purpose**: Cushions and secures electronic components.
- **Functionality**: Absorbs shocks, reduces vibrations, and ensures a snug fit for delicate parts.
- **Application**: Used to pad and protect the Arduino, LCD display, and servo motor inside the cardboard enclosure.

Chocolate:

- **Purpose**: Acts as a tangible reward for winning the game.
- **Functionality**: Motivates players and adds a physical incentive for successful gameplay.
- **Application**: Loaded into a dispenser mechanism controlled by a servo motor to reward players when they win by stopping the LED strip at the correct position.

2.2 ELECTRICAL COMPONENTS

1.Arduino

Fig.2.2.1 Arduino

The Arduino Mega 2560 is a micro controller board based on the ATmega2560. Our project is controlled by Arduino

2.Servo motor

Fig 2.2.2 Servo Motor

A servo motor is an actuator. The servo motor in the Cyclone Arcade Game project controls a mechanism that dispenses chocolates as a reward to players when they successfully win the game. It activates when the player stops the LED strip at the correct position, providing immediate feedback and enhancing the interactive experience with physical rewards.

3. LCD Display

Fig.2.2.3 LCD Display

In our project, we used 16x2 LCD display. The LCD (Liquid Crystal Display) in the Cyclone Arcade Game project displays game instructions, status messages, and results. It provides essential visual feedback to players, enhancing their understanding of gameplay and interaction with the game's interface.

4. IR Sensor

Fig.2.2.4 IR Sensor

The IR (Infrared) sensor in the Cyclone Arcade Game detects the presence of players, signaling when they are ready to play. It enhances interactivity by initiating game sequences when players approach, ensuring responsive and engaging gameplay.

5. Push Button

Fig.2.2.5 Push button

The push button in the Cyclone Arcade Game allows players to interact with the game by starting and stopping the LED strip. It serves as the primary control mechanism, enabling players to participate actively in gameplay and attempt to achieve the winning position.

6. LED STRIP

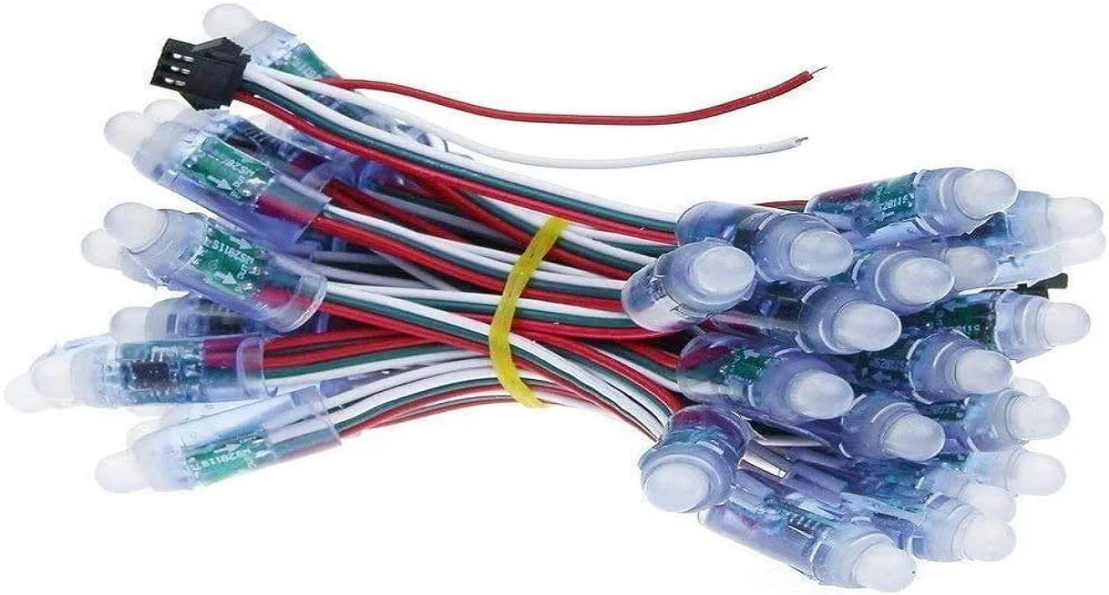

Fig.2.2.6 LED Strip

The WS2812B LED strip is a flexible, addressable RGB LED strip where each LED can be individually controlled for color and brightness using a single data line.

3.DESIGN CALCULATION

Motor sizing: Tower Pro SG90 Servo - 9 gm Mini/Micro Servo Motor.

Battery sizing:

1. Servo motor consume 50mA

2.LCD display 16*2 consume 20mA

3.IR sensor consume 20mA

4. Push button consume 15mA

5. Led strip consumes 60 mA

Total: -165 mA

Therefore, we require 5 V Adapter

4.EXPERIMENT SETUP

●Flow chart

The Cyclone Arcade Game project begins with the initialization of all components, including the LED strip, LCD display, servo motor, push button, and IR sensor, followed by displaying a welcome message on the LCD. The game then enters the player detection phase, where the IR sensor checks for the presence of a player. If a player is detected, the LCD displays "Player Ready!" and waits for the player to press the push button to start the game. Upon pressing the button, the game starts by clearing the LCD and showing "Playing...", while the LEDs light up sequentially to create a moving light effect. During the gameplay loop, the system continuously checks for a button press to stop the light. When the player presses the button, the game stops the moving light and checks if it is at the winning position. If the light is at the winning position, the LCD displays "You Win!" and the servo motor activates to dispense a chocolate reward. If the light is not at the winning position, the LCD displays "Try Again!". Finally, the game resets its state and returns to the player detection phase, ready for the next player. This organized sequence ensures an engaging and educational experience for players, combining interactive gameplay with hands-on learning in electronics and programming.

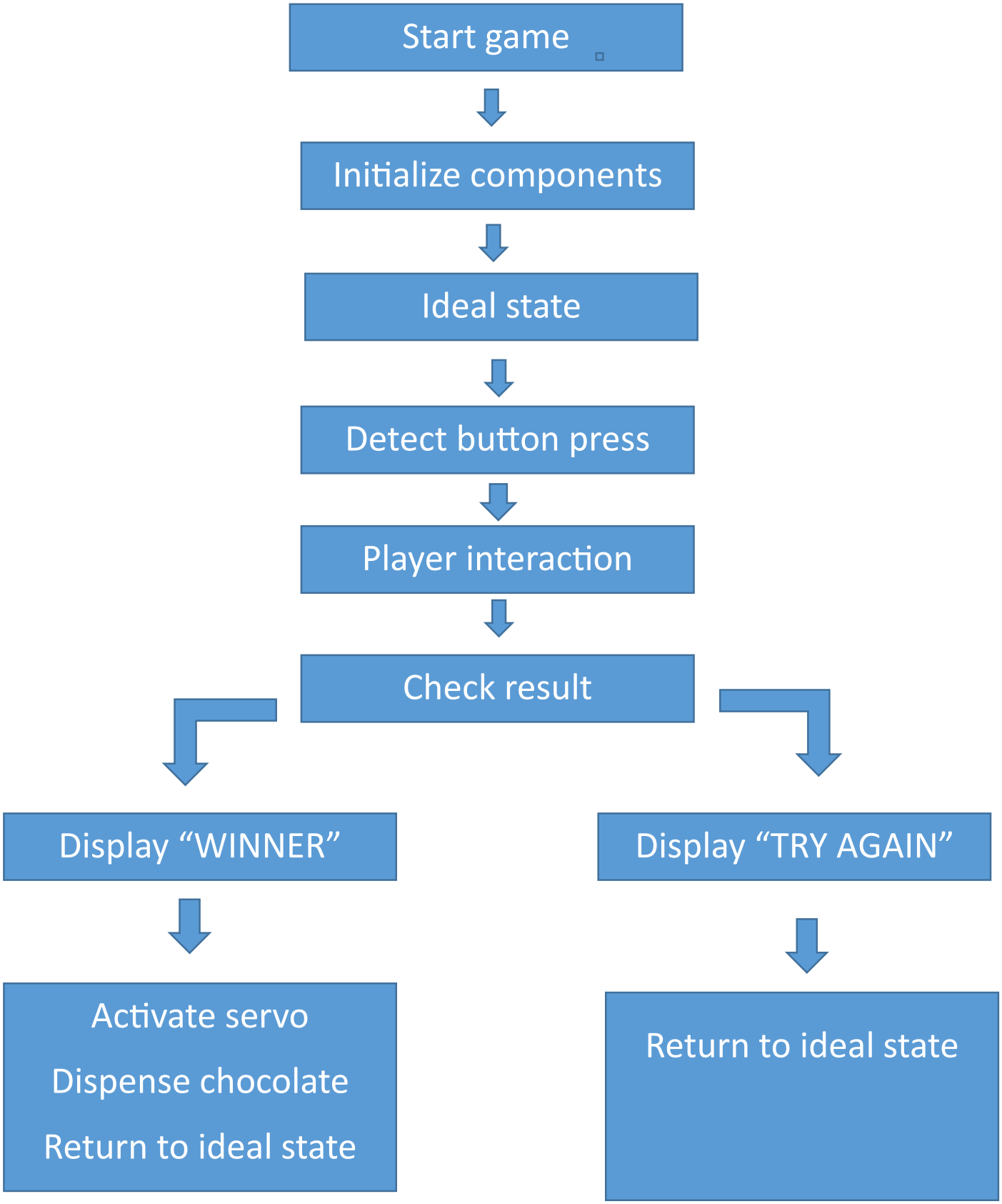

Fig 4.1 Flow chart

● Circuit diagram

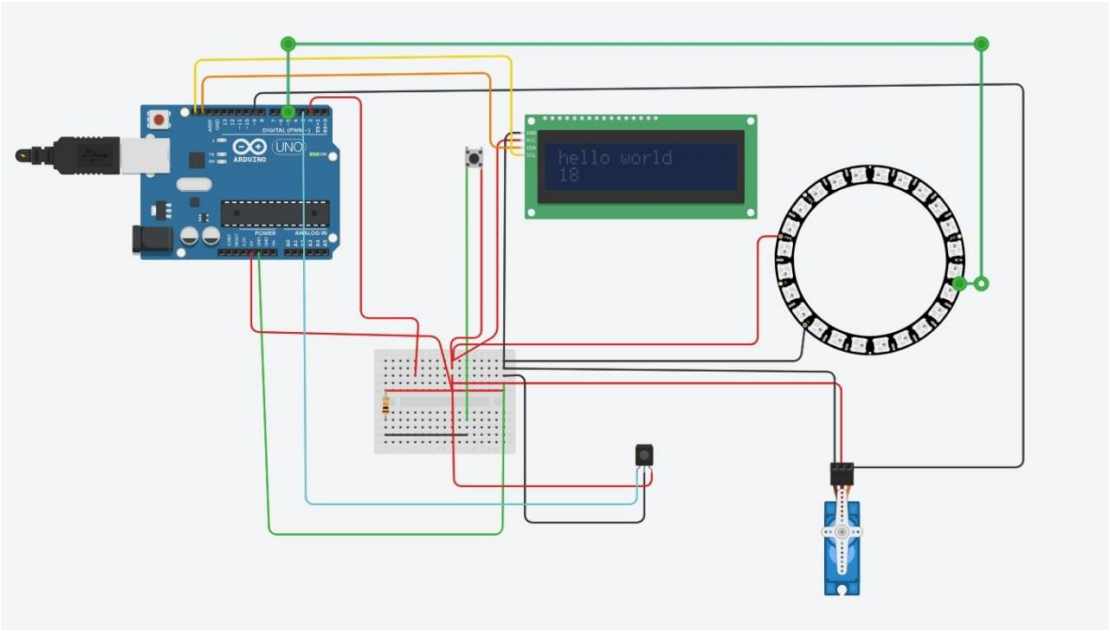

Fig 4.2 Circuit diagram

● Code

```
#include<FastLED.h>
#include<Servo.h>
#include<LiquidCrystal_I2C.h
Servo S1;
LiquidCrystal_I2C lcd(0x27,16,2);
#define LED_PIN 5
#define NUM_LEDS 50
#define PUSH_BUTTON 2
#define IR_SENSOR_PIN 3
#define SERVO_PIN 9
CRGB leds[NUM_LEDS];
int LEVEL = 1;
int HIGH_SCORE = 0;
```

```
int i, j, k, button_state, z, s;
int distance;
void setup() {
  FastLED.addLeds<WS2812, LED_PIN, RGB>(leds, NUM_LEDS);
  pinMode(PUSH_BUTTON, INPUT);
  pinMode(IR_SENSOR_PIN, INPUT);
  S1.attach(SERVO_PIN);
  Serial.begin(9600);
  lcd.init();
  lcd.backlight();
  updateLCD();
}
void loop() {
   i = 0;
  while (i < 50) {
    leds[i] = CRGB(255, 255, 255);
    FastLED.show();
    DELAY_LED();
    leds[i] = CRGB(0, 0, 0);
    FastLED.show();
    DELAY_LED();
    button_state = digitalRead(PUSH_BUTTON);
    if (button_state == HIGH) {
      if (i == 0) {
          WinSequence();
          lcd.clear();
          lcd.setCursor(3, 0);
          lcd.print("!!Hurray!!");
          delay(1000);
```

```
      HIGH_SCORE = HIGH_SCORE + 1;
      if (LEVEL < 5) {
        LEVEL = LEVEL + 1;
      }
      updateLCD();
    }
    else {
      LooseSequence();
      lcd.clear();
      lcd.setCursor(2, 0);
      lcd.print("Better  Luck");
      lcd.setCursor(3, 1);
      lcd.print("Next  Time");
                    LEVEL = 1;
      HIGH_SCORE = 0;
      updateLCD();
    }
  }
  i = i + 1;
  i = i % 50;
 }
}
void DELAY_LED() {
 if (LEVEL == 1) {
  delay(50);
 }
 if (LEVEL == 2) {
  delay(45);
```

```
  }
  if (LEVEL == 3) {
    delay(40);
  }
  if (LEVEL == 4) {
    delay(35);
  }
  if (LEVEL == 5) {
    delay(30);
  }}
void updateLCD() {
  lcd.clear();
  lcd.setCursor(0, 0);
  lcd.print("Level: ");
  lcd.print(LEVEL);
  lcd.setCursor(0, 1);
  lcd.print("Score: ");
  lcd.print(HIGH_SCORE);
}
void WinSequence(){
        for (j = 0; j < 50; j++) {
        leds[j] = CRGB(255, 0, 0);
        FastLED.show();
        delay(10);
      }
      for (j = 49; j >= 0; j--) {
        leds[j] = CRGB(0, 255, 0);
        FastLED.show();
        delay(10);
```

```
    for (j = 0; j < 50; j++) {
      leds[j] = CRGB(0, 0, 255);
      FastLED.show();
      delay(10);
    }
    for (j = 49; j >= 0; j--) {
      leds[j] = CRGB(255, 255, 255);
      FastLED.show();
      delay(10);
    }
    for (j = 0; j < 50; j++) {
      leds[j] = CRGB(0, 0, 0);
    }
    FastLED.show();
    delay(10);
}
void LooseSequence(){
    for (z = 0; z < 50; z++) {
      leds[z] = CRGB(255, 0, 0);
    }
    FastLED.show();
    delay(500);
    for (z = 0; z < 50; z++) {
      leds[z] = CRGB(0, 0, 0);
    }
    FastLED.show();
    delay(500);
     for (z = 0; z < 50; z++) {
```

```
    leds[z] = CRGB(255, 0, 0);
  }
  FastLED.show();
  delay(500);
  for (z = 0; z < 50; z++) {
    leds[z] = CRGB(0, 0, 0);
  }
  FastLED.show();
  delay(500);
  Chocolate_Dispense();
}
void Chocolate_Dispense(){
  if(HIGH_SCORE >= 5)
  {
     for(int i=0;i<=60;i+=1)
       {
       S1.write(i);
       delay(15);
       }
        delay(1000);
     for(int i=60;i>=0;i-=1)
      {
        S1.write(i);
        delay(15);
      }
       delay(1000);
       if( digitalRead(IR_SENSOR_PIN) == LOW)
       {
         lcd.clear();
```

```
            lcd.setCursor(2, 0);
            lcd.print("Collect  the");
            lcd.setCursor(3,1);
            lcd.print("Chocolate");
          }
          else
          {
            lcd.clear();
            lcd.setCursor(3,0);
            lcd.print("Refill the");
            lcd.setCursor(3,1);
            lcd.print("Chocolates");
           }
      }
}
```

●Experiment result

Test Scenario	Action	Result
LED Strip Power Consumption	LEDs at 50% brightness	0.6 A for 50 LEDs
LED Strip Power Consumption	LEDs at 100% brightness	3.6 A for 50 LEDs
Button Response Time	Press button to stop LED	100 ms average
Display Update Time	Update display after button press	50 ms average
Servo Motor Activation	Dispense chocolate	500 ms average
IR Sensor Detection	Detect player action	Effective range: 5 cm, 200 ms
Game Initialization	Power on and start game	2 seconds
Total Power Consumption	Full game cycle at max load	5V at 4A (20W

Table 4.1 Result table

MECHANICAL MODEL

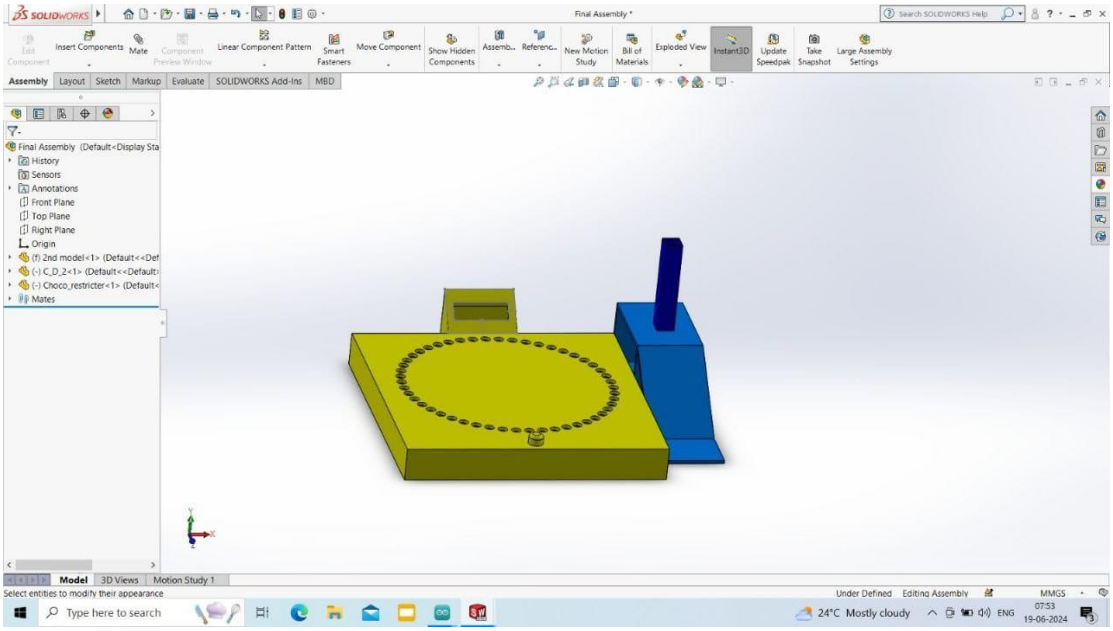

Fig 4.3 Mechanical model

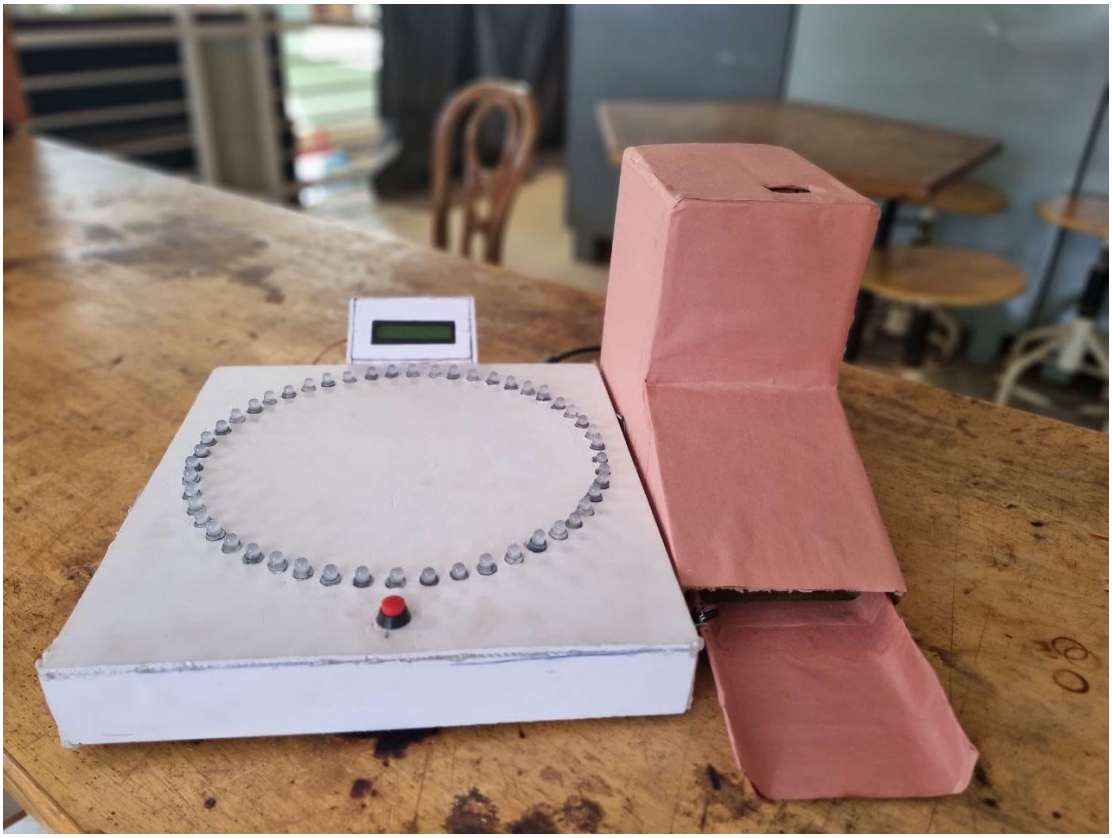

Fig 4.4 final model

5.CONCLUSION

The Cyclone Arcade Game project combines entertainment with educational value, offering an engaging experience that introduces users to electronics and programming concepts. Featuring components like LEDs, LCD displays, a servo motor, push buttons, and IR sensors, the game provides interactive gameplay while fostering practical skills in circuitry and Arduino programming. With a creative use of cardboard and foam sheeting for construction and a chocolate dispensing reward system, the project encourages learning through hands-on exploration in a fun and innovative manner.

.

6.REFERENCES

1. Y. Lu et al., "Blockchain and Federated Learning for Pri-vacy-Preserved Data Sharing in Industrial IoT", *IEEE Trans. Industrial Informatics*, 2019.

2. J. Feng et al., "Collaborative Computation Offloading and Resource Allocation for Blockchain-Enabled Mobile Edge Computing: A Deep Reinforcement Learning Approach", *IEEE Internet of Things J.*, 2019.

3. Y. Lu et al., "Blockchain and Federated Learning for Pri-vacy-Preserved Data Sharing in Industrial IoT", *IEEE Trans. Industrial Informatics*, 2019.

4. Schofield M. 1995. Cleaning Robots: Service Robot: An International Journal, 1(3), 11–16.
5. Rehg and James A. 1997. Introduction to Robotics in CIM Systems. New Jersey: Prentice Hall.
6. Abramson, Shai, Shalom L. and Ran Z. 2006. Robotic Vacuum Cleaner. U.S. Patent No. 7,079,923.